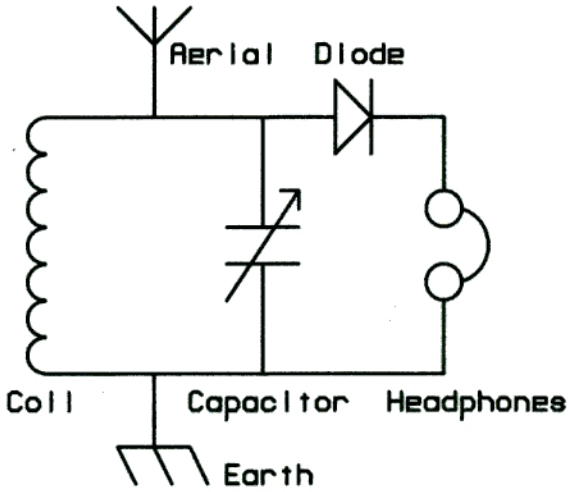

Basic Circuit

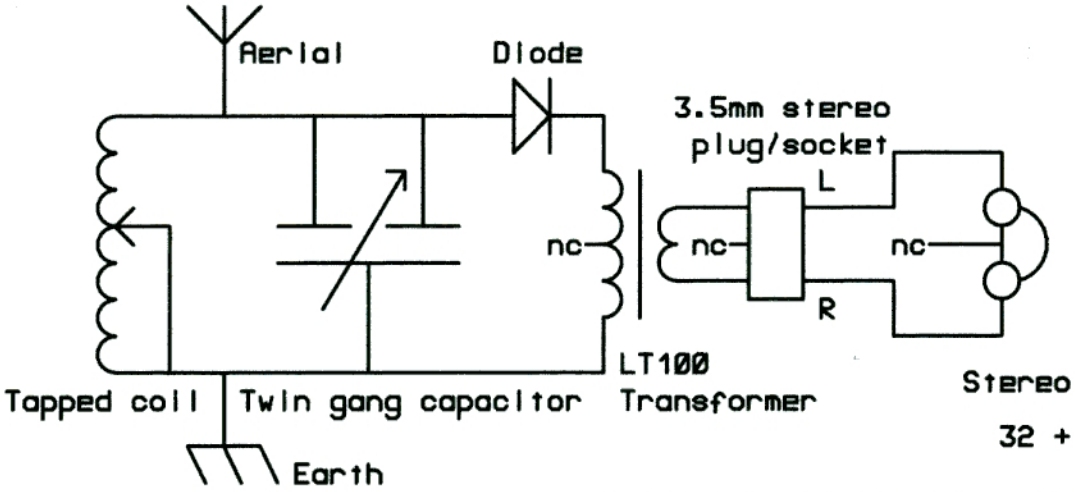

Practical Circuit

(common headphone connection not used)

nc = no connection

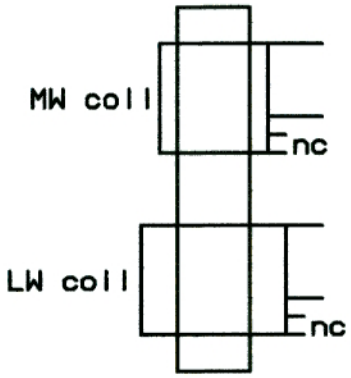

Ferrite rod alternative

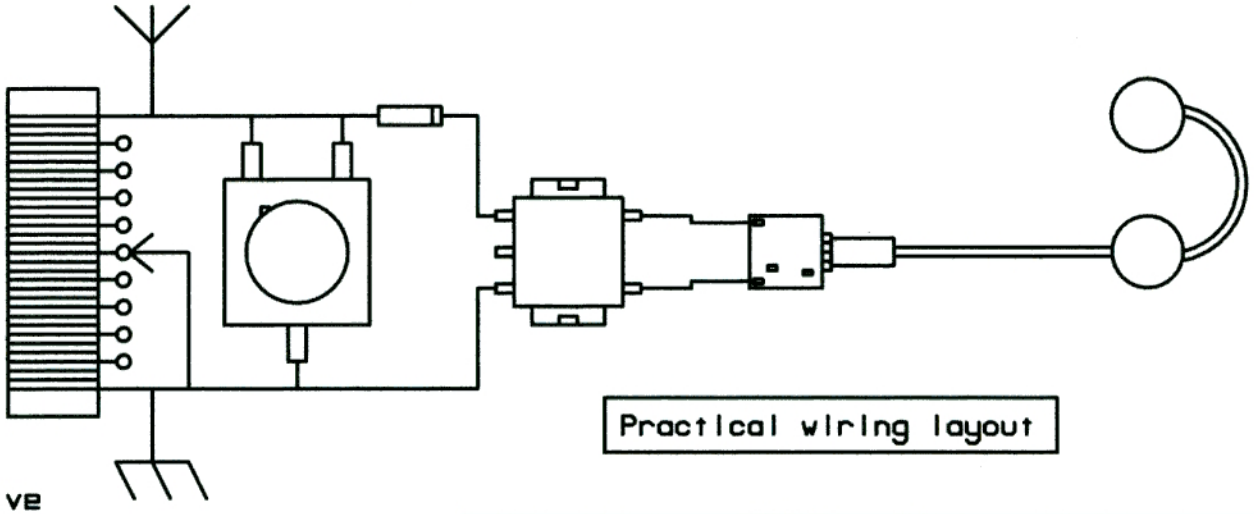

Practical wiring layout

THIS DRAWING IS THE PROPERTY OF THE OPEN UNIVERSITY AND MAY NOT BE REPRODUCED OR DISCLOSED TO A THIRD PARTY WITHOUT WRITTEN PERMISSION. © 00 OPEN UNIVERSITY

DRN:- FGR	TITLE
DATE:- 11/05/2007	OU BBC Crystal Set
JOB No:- 2625	
ISSUE:- 1	